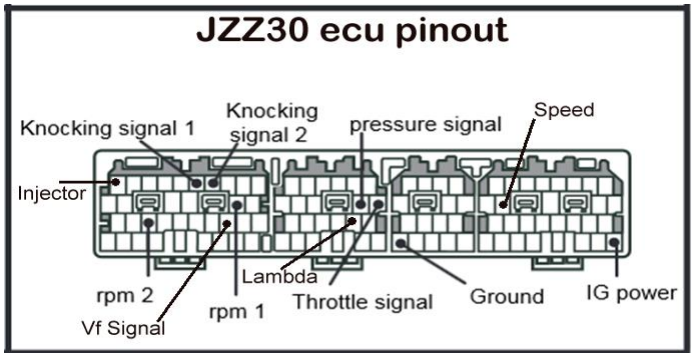

Created by Marco@shoarmateam.nl

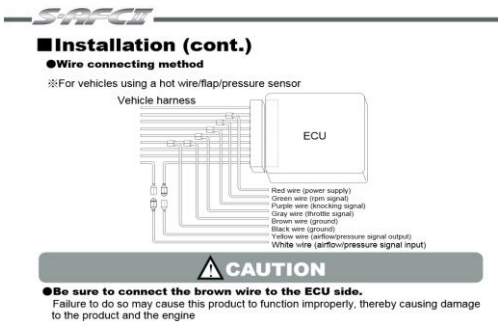

●Be sure to cover all exposed connections with electrical tape

●It is very important to keep the voltage precise. Be sure to have the 2 separate Ground Wires (Black Wire and Green Wire).
Be sure to connect the Ground Wires exactly as shown below.
Failure to do so may cause to damage not only to this product but also to the engine of installed vehicle.

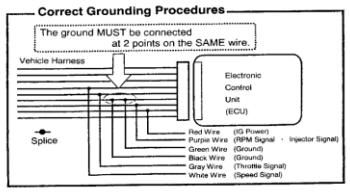

Wideband Zt2

Color	Function	Description	ECU Abbrev.	ECU Wiring colors	JZZ30 Pinout picture
red	Switched power (ex. ignition)	ECU Switched +	+B	Black/Red	IG Power
White	Wideband Analog Output	-	-	-	-
Green	RPM Input. 0-12V square wave, tach signal or primary (low voltage) side of ignition coil.	RPM	IGF	Red/Yellow	RPM 1
Orange	Zeitronix Boost (MAP) Sensor Input	-	-	-	-
-	Warning Output	-	-	-	-
Yellow	Zeitronix Boost Sensor +5V Power. Connect ONLY to Zeitronix Boost Sensor RED.	-	-	-	-
Black	Power Ground	Ground (body)	-	-	Body Ground (Connect inside the car to bare metal)
Brown	Sensor Ground (EMS ground reference)	ECU Ground	E1	Brown	Ground
Purple	Simulated Narrowband O2 Output (for your stock ECU) / Linear Wideband Output	Lambda Oxygen signal	OX1	White	Lambda
Grey	Throttle Position Sensor	TPS	VTA1	Yellow	Throttle Signal
Brown	Sensor Ground (Boost Sensor ground reference)	-	-	-	-
Blue	User Input 0-5V	Vf signal	Vf	Grey/Yellow	Vf Signal

Apexi S-AFC

Red	Power supply	Switched Power	+B	Black/Red	IG Power
Green	RPM	RPM Signal	IGF	Red/Yellow	RPM 1
Purple	Knocking signal connect to nr 1 knock signal wire	Knock Signal	KNK1	Shielded wire	Knocking Signal 1
Gray	Throttle position signal	Throttle Position	VTA1	Yellow	Throttle Signal
Brown	Connect to ECU side	Ground (ecu)	E1	Brown ecu side	Ground
Black	Connect to engine side	Ground (engine)	E1	Brown engine side	Ground
Yellow	Cut the MAP Signal wire. Connect Yellow to ECU side	MAP Signal (1jz)	PIM	Lime/black Ecu side	Pressure signal
White	Cut the MAP Signal wire. Connect White to wiring loom	MAP Signal (1jz)	(PIM to Engine)	Lime/black Engine side	To wiring loom
Blue	Second AFM Signal	Only RB26DETT	-	-	-
Orange	Karman: Cut the AFM Signal wire. Connect orange to ECU side	AF Signal out (7mgte)	-	-	-
Pink	Karman:Cut the AFM Signal wire. Connect Pink to ECU side	AF Signal in (7mgte)	-	-	-

AVC-R

Red	Switched power	Switched power	+B	Black/Red	IG Power
Purple	RPM / injector signal	RPM sig.injector duty cycle	#10	Yellow	Injector
Green	ECU Ground ECU Side	Ground	E1	Brown ecu side	Ground
Black	ECU Ground Engine Side	Ground	E1	Brown engine side	Ground
Gray	Throttle position signal	TPS	VTA1	Yellow	Throttle Signal
White	Speed signal	Speed	SP1	Pink	Speed

Links

S-AFC II
http://www.apexi-usa.com/manuals/electronics/safc2_wiring.pdf
http://www.apexi-usa.com/manuals/electronics/safc2_manual.pdf

AVC-R
http://www.apexi-usa.com/manuals/electronics/avcr_wiring.pdf
http://www.apexi-usa.com/manuals/electronics/avcr.pdf

Zeitronix
http://www.zeitronix.com/questions/Zt-2questions.shtml

Initial setup of the S-AFCII

Perform initial setup

To operate this product, you must set several items during initial setup.
After making sure that the SAFC II is securely installed, turn on the ignition switch and select the ETC. (etc. mode) in the main menu.

Table of initial setup items

1. Setting the sensor type and sensor number (P.44 [Sensor Type])
   Select Sensor Type and set the sensor type and sensor number
   For vehicles equipped with a hot wire sensor, set the sensor output calculation method.
2. Setting the number of cylinders (P.50 [Car Select])
   Select Sensor Type and set the number of cylinders
   You can select it in the range of 1 to 16 cylinders
   Rotary engine car: Number of rotors ×2
   Mazda Atenza (GG#S/P, GY #W):2 Demio(DY#W):1
   Toyota V8 engine car:4 PASSO（KGC10）: 1
   Nissan Fairlady Z (Z33):1 SKYLINE（CPV35）: 1

Dalhatsu Boon(M300S): 1

※For a car without throttle sensor signal, start operations from 6.

3. Checking the throttle sensor voltage (P.52 [Sensor chk])

Select Sensor chk and check the throttle sensor voltage with the throttle fully closed and once with the throttle fully open.

4. Setting the throttle sensor type (P.50 [Car Select])

Select Car Select. When the throttle sensor voltage is 0 V to 1 V fully closed in the previous step, set the arrow to the upward direction. When the throttle voltage is 3 V to 5 V, set the arrow to the downward direction. When the arrow is set to the ** mark , no correction is performed by throttle opening .

5. Self Learning the throttle angle

Self Learn the throttle angle. While indicating throttle angle in monitor mode, Make sure to see the throttle angle"0"when the throttle is fully closed.

Then, keep the throttle opened before the throttle angle attains 100% with indication.

※Note: It takes around 60 seconds for self learning depends on the model.

6. Turn off the ignition switch

When the ignition switch is turned off, the set items are stored in the memory

※After this, the initial setup is completed for a car without any knocking signal. For a car with a knocking signal, perform setting 7

7. Correcting the knocking signal (P.38 [Knk Set])

Start the engine and perform warming-up. After completion of warming-up, select Setting (setting mode) in the SAFC II main menu and select the knocking signal correction mode. Correct the knocking signal .

⚠ WARNING

- Do not start the engine before starting the initial setup

  If the engine is started without initial setup, the engine may be damaged

●Be sure to cover all exposed connections with electrical tape

●It is very important to keep the voltage precise. Be sure to have the 2 separate Ground Wires (Black Wire and Green Wire).
Be sure to connect the Ground Wires exactly as shown below.
Failure to do so may cause to damage not only to this product but also to the engine of installed vehicle.

Correct Grounding Procedures

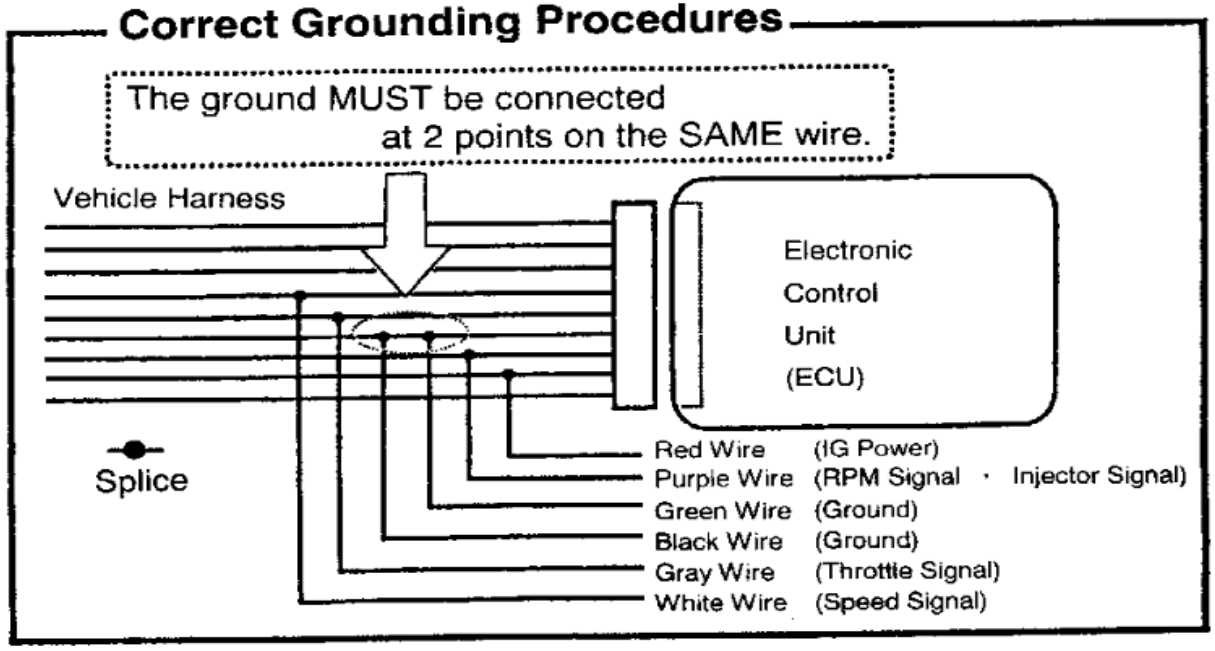

■Installation (cont.)

●Wire connecting method

※For vehicles using a hot wire/flap/pressure sensor

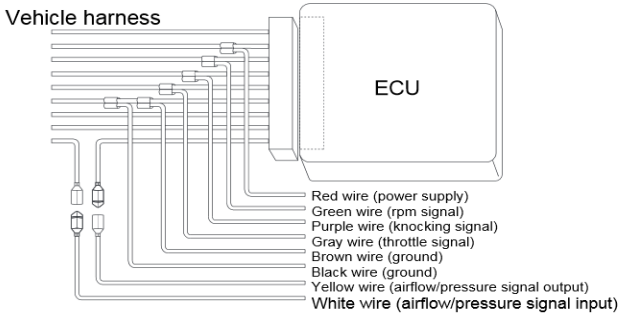

⚠CAUTION

●Be sure to connect the brown wire to the ECU side.

Failure to do so may cause this product to function improperly, thereby causing damage to the product and the engine